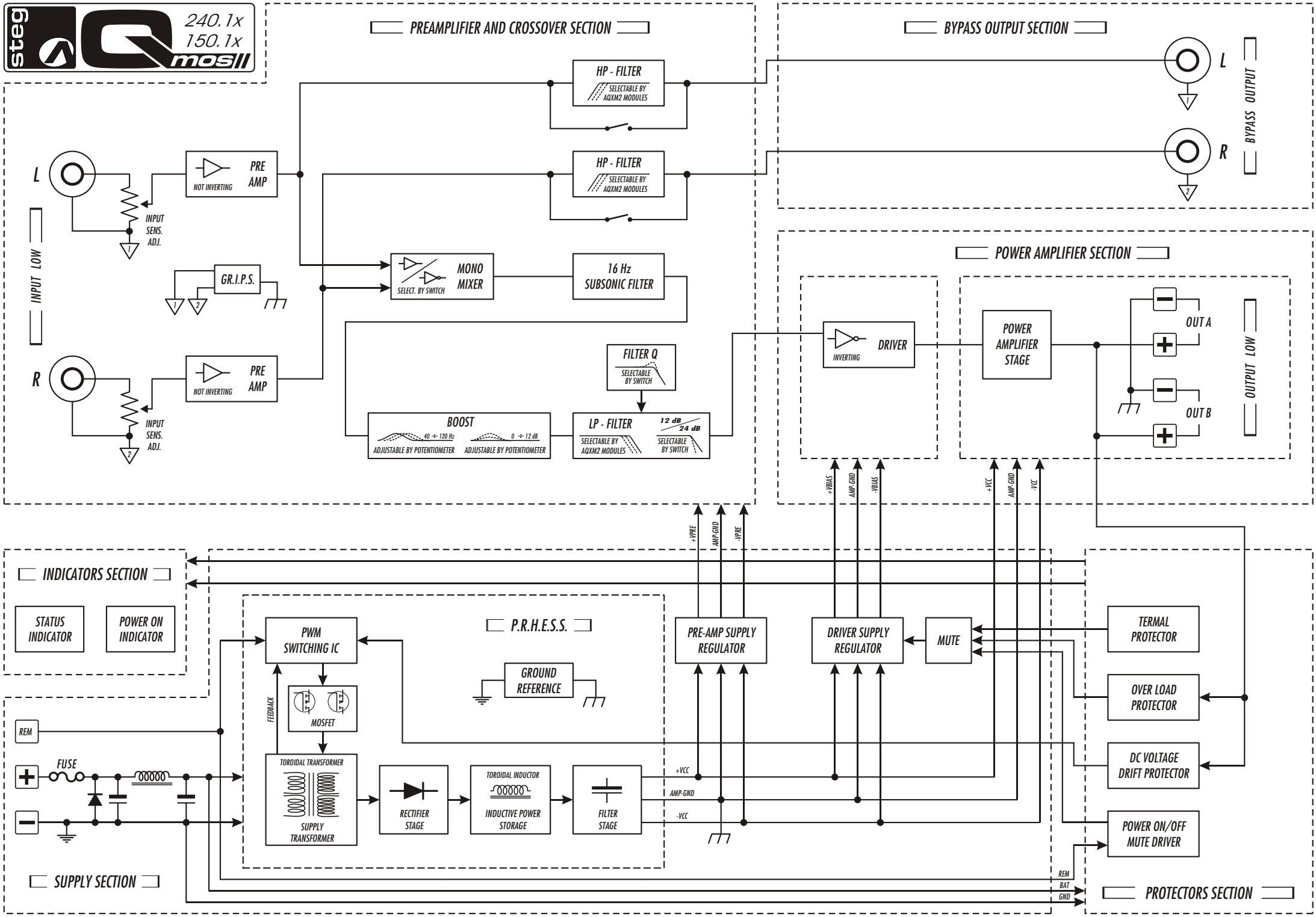
steg
240.1x
150.1x
Qmos II
PREAMPLIFIER AND CROSSOVER SECTION
BYPASS OUTPUT SECTION
L
R
BYPASS OUTPUT
HP - FILTER
SELECTABLE BY AQXM2 MODULES
HP - FILTER
SELECTABLE BY AQXM2 MODULES
INPUT LOW
L
R
NOT INVERTING
PRE AMP
NOT INVERTING
PRE AMP
INPUT SENS. ADJ.
INPUT SENS. ADJ.
GR.I.P.S.
SELECT. BY SWITCH
MONO MIXER
16 Hz SUBSONIC FILTER
FILTER Q
SELECTABLE BY SWITCH
BOOST
40 ÷ 120 Hz
0 ÷ 12 dB
ADJUSTABLE BY POTENTIOMETER
ADJUSTABLE BY POTENTIOMETER
LP - FILTER
12 dB
24 dB
SELECTABLE BY AQXM2 MODULES
SELECTABLE BY SWITCH
POWER AMPLIFIER SECTION
INVERTING
DRIVER
POWER AMPLIFIER STAGE
OUT A
OUT B
OUTPUT LOW
+VBIAS
AMP-GND
-VBIAS
+VCC
AMP-GND
-VCC
+VPRE
AMP-GND
-VPRE
INDICATORS SECTION
STATUS INDICATOR
POWER ON INDICATOR
P.R.H.E.S.S.
PWM SWITCHING IC
GROUND REFERENCE
FEEDBACK
MOSFET
TOROIDAL TRANSFORMER
SUPPLY TRANSFORMER
RECTIFIER STAGE
TOROIDAL INDUCTOR
INDUCTIVE POWER STORAGE
FILTER STAGE
+VCC
AMP-GND
-VCC
PRE-AMP SUPPLY REGULATOR
DRIVER SUPPLY REGULATOR
MUTE
TERMAL PROTECTOR
OVER LOAD PROTECTOR
DC VOLTAGE DRIFT PROTECTOR
POWER ON/OFF MUTE DRIVER
REM
FUSE
SUPPLY SECTION
REM
BAT
GND
PROTECTORS SECTION