TOLERANCE	I	II	III	ANGLE	SYMBOL	DATE	REVISION
0.5 ～ 6	±0.05	±0.1	±0.2	±0.5°	△ ×		
6 ～ 30	±0.1	±0.2	±0.5	±1°	△ ×		
30 ～ 120	±0.15	±0.3	±0.8	±1.5°	△ ×		
120 ～	±0.2	±0.5	±1.2				

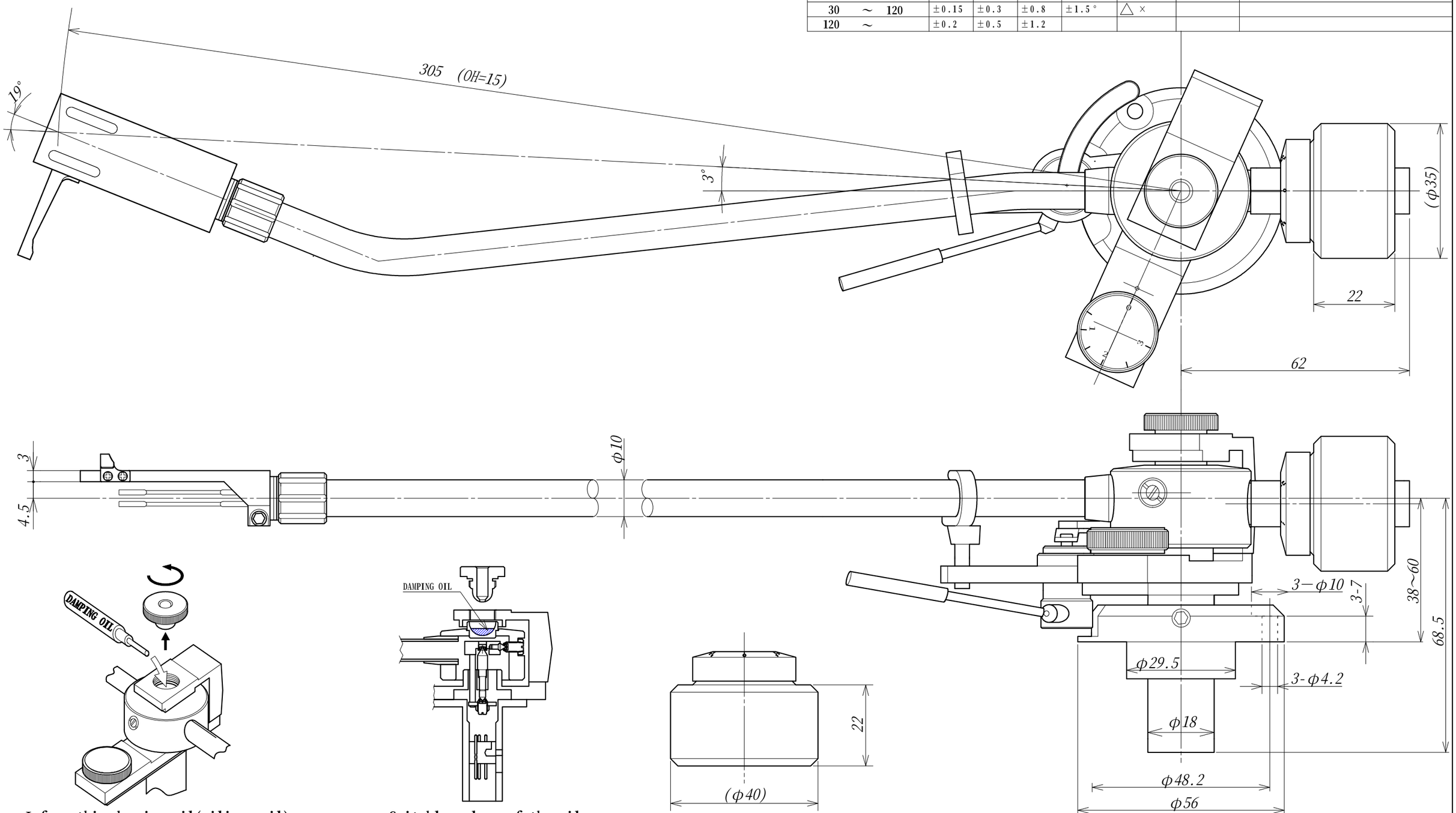

Infuse this damping oil(silicon oil) into the cup (see the diagram)

Suitable volume of the oil in a cup is a half level (see the diagram)

Optional counterweight

Suitable cartridge self-weight : 4gr to 12gr

: 12gr to 22gr(Optional counterweight)

No.	QNT	DRAWING No.	PARTS NAME	MATERIAL	FINISH	NOTES

MATERIAL

FINISH

PARTS NAME: SA-750L TONE ARM

DISIGNED

APPROVED

DRAWING No. 3−2207

DRAWN FEB.06.2009 T.HOSODA

CHECKED

SA-750L

MODEL No.

3RD ANGLE PROJECTION

UNIT:mm SCALE 1 : 1

JELCO ICHIKAWA JEWEL CO.,LTD.